EPD FPC

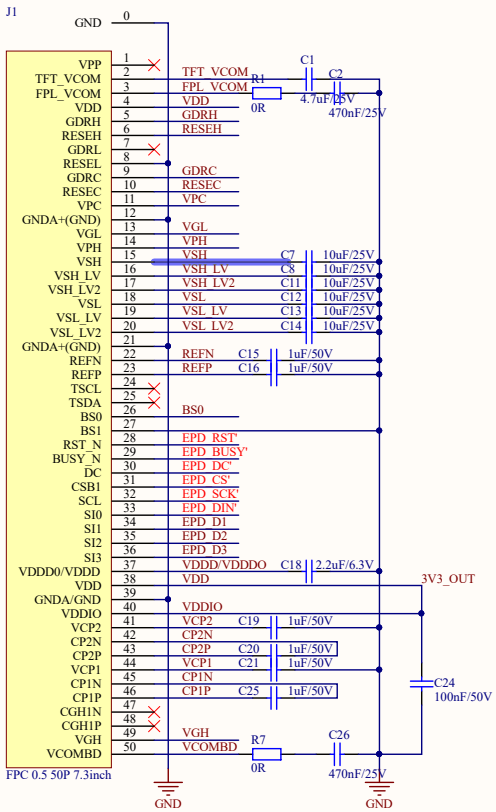

Boost

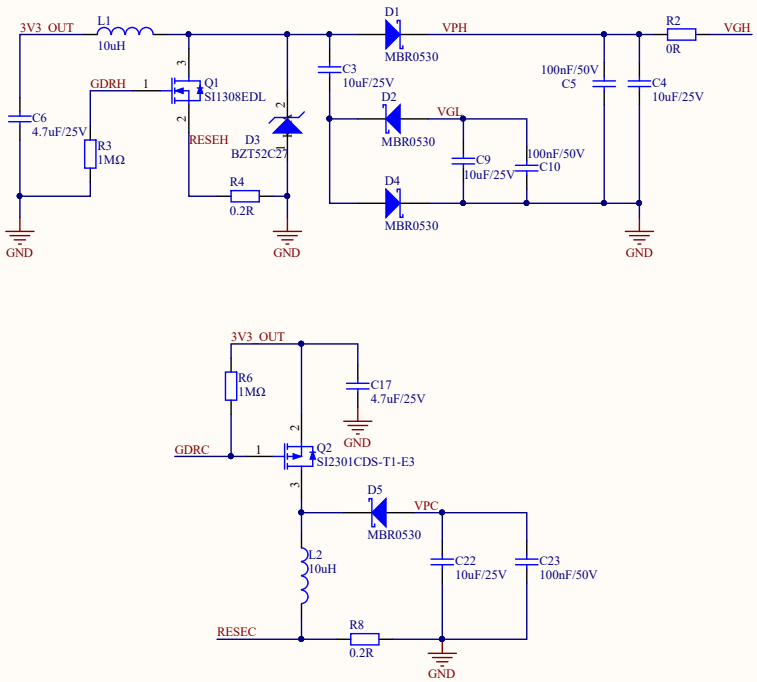

SPI Mode Selection

BS	VCC	GND
Interface	3-line SPI	4-line SPI

Type	BS1	BS0	SPI mode
1	0	0	4-wire SPI
2	0	1	3-wire SPI
3	1	0	Standard 4-wire SPI/Dual SPI/Quad SPI
4	1	1	

PH2.0 8Pin

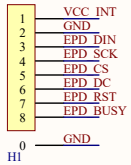

Load Switch & LDO

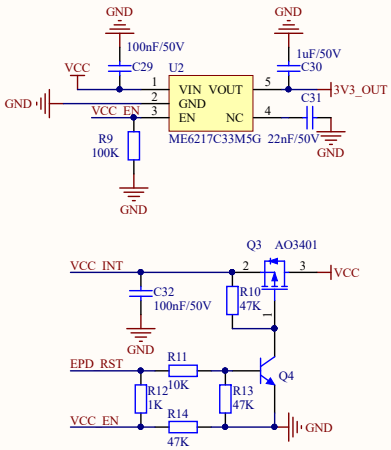

Level Translator

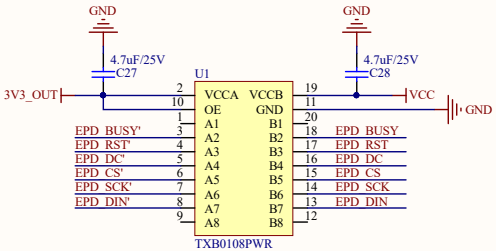

RPI

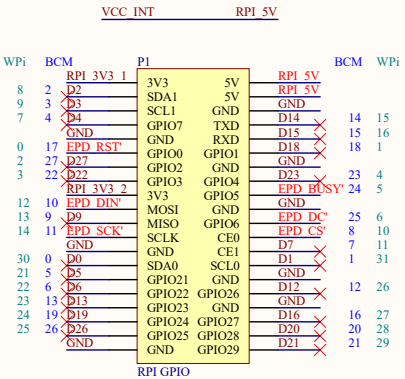

7.3inch e-Paper HAT (E)

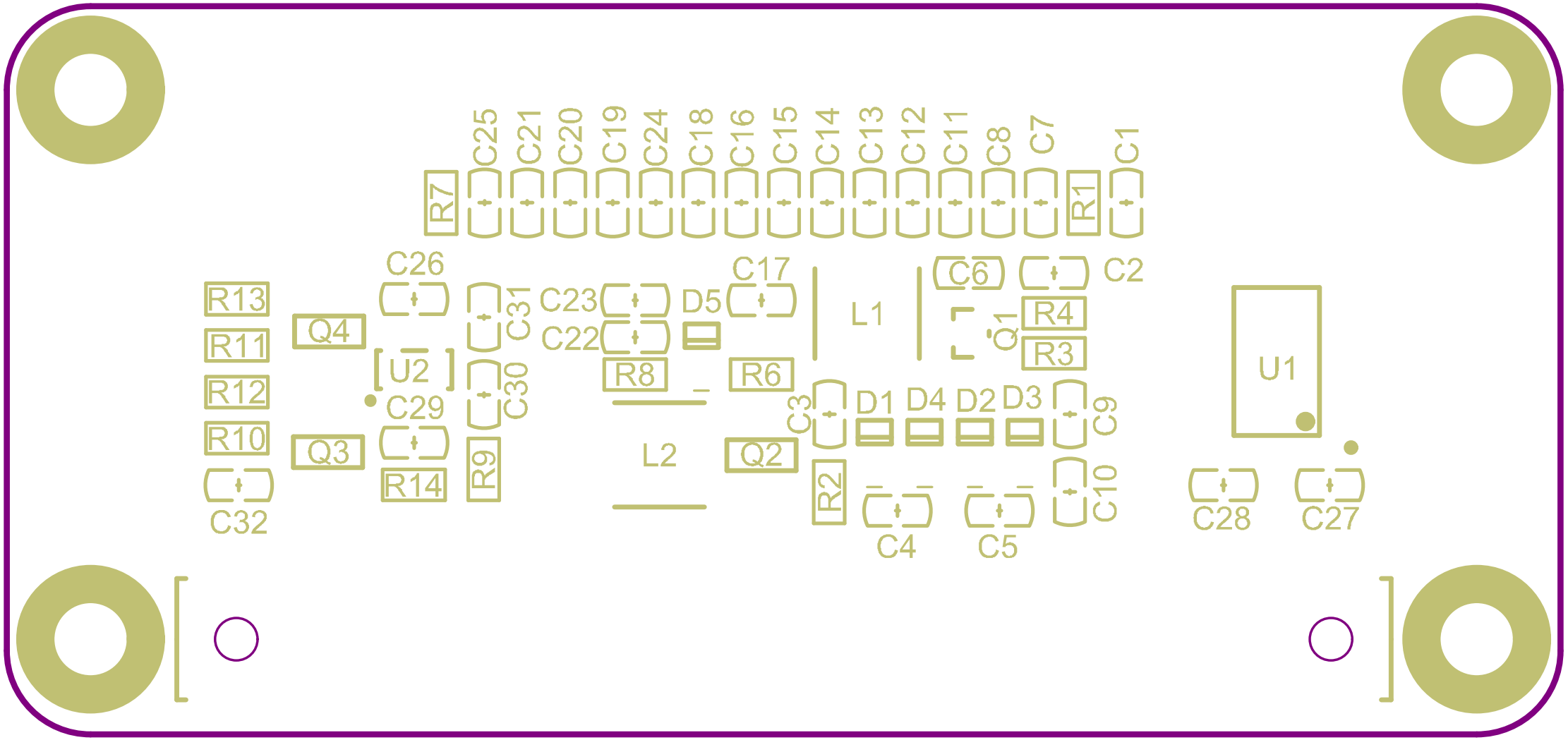
C25
C21
C20
C19
C24
C18
C16
C15
C14
C13
C12
C11
C8
C7
C1
R7
R1
C26
C17
C6
C2
R13
Q4
C31
C23
D5
L1
R4
R11
C22
Q1
R3
U2
R8
R6
U1
R12
C29
C30
C3
D1
D4
D2
D3
C9
R10
Q3
R9
L2
Q2
R14
R2
C10
C32
C4
C5
C28
C27